# Data Sheet

Article number: 2310313935
Description: E+G Levelling element
LV.F-125-ACV-M24x186

## Measures

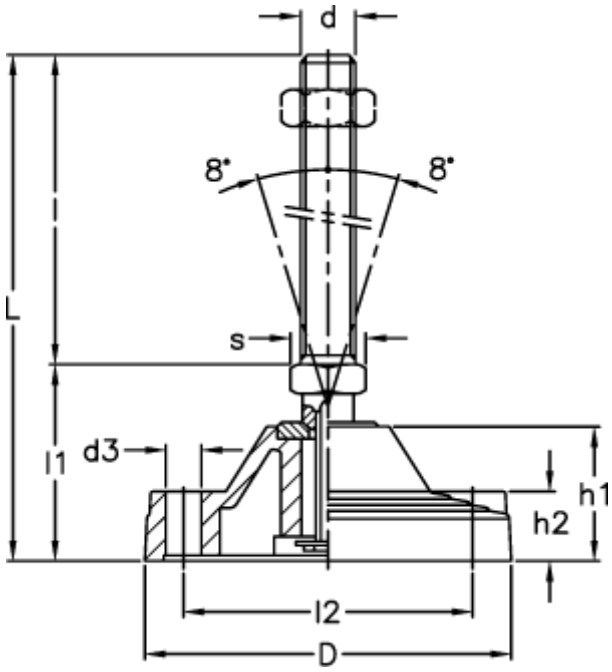


| | | | |
|---|---|---|---|
| D | = 125 | l2 | = 95 |
| d | = M24 | Max load (N) | = 40000 |
| d3 | = 12.5 | s | = 24 |
| h1 | = 45 | | |
| h2 | = 23 | | |
| l | = 186 | | |
| L | = 250 | | |
| l1 | = 64 | | |

*Product drawings and brochures of any kind may contain errors for which Brd. Klee A/S cannot be liable.*